konveka

EURONORM EN 16430 TESTED

TRENCH HEATERS FCH

FOR HEATING

FOR COOLING

FAN ASSISTED

- 10 models
- Stainless steel casings
- 2 and 4 pipes versions
- Wet cooling and dry cooling ready
- Remarkably low noise level
- Tested according to EN16430 in independent accredited laboratory
- 10 year warranty for casings and heat exchangers
- Fans with most economical and quiet EC type motors
- High rise of cooled air
- Excelent compatibility with heat pumps and condensate boilers
- Max operating pressure 25 bar
- Possibility to control up to 30 units with 1 room thermostat
- Highly efficient and economic copper–aluminium heat exchangers
- Safe voltage of fans – 24V (DC)
- Supply air filters are in standard set
- Reversible reinforced profile grilles
- All fixing brackets and bolts have sound proofing elements
- Possibility to change level of casing at any time during exploitation (when installed in raised floors)

2021

FCH

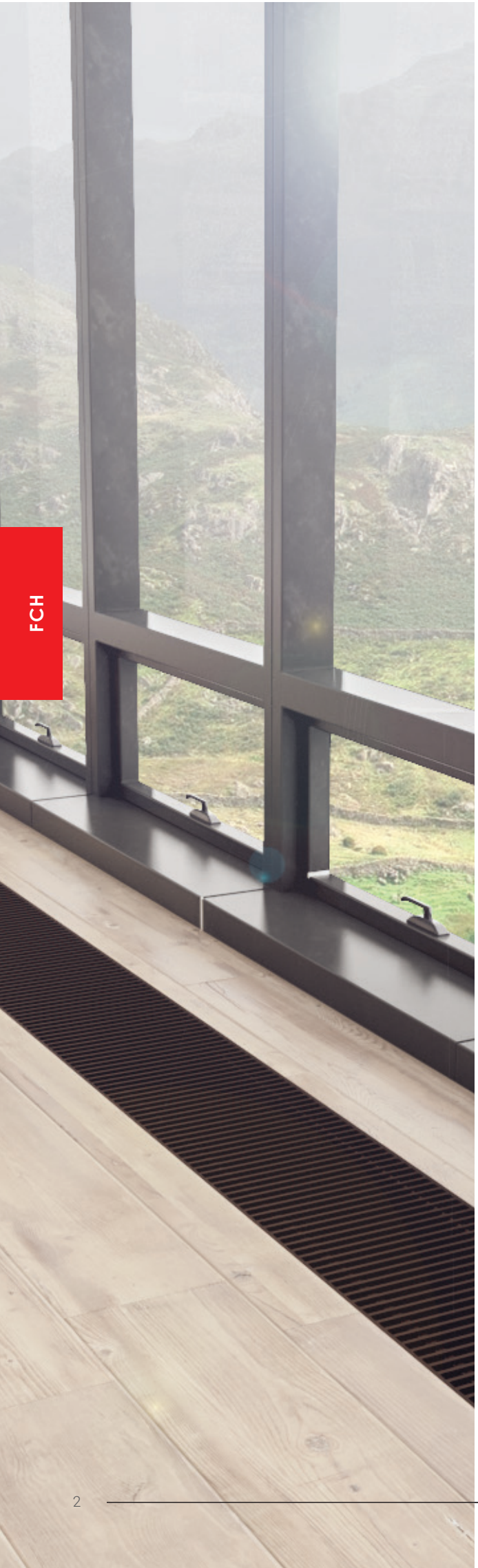

FCH

TRENCH HEATERS **FCH**

FCH are among the most powerful trench heaters designed for **heating and cooling**.

Both heated and cooled air is raised right up the ceiling to result in an **even distribution** throughout the room.

4 and 2 pipe connection versions are available. The 4 pipe connection guarantees maximum flexibility, whereas the 2 pipe connection will ensure the maximum capacity.

The air flow passing through the appliance **is continuously filtered** to trap a considerable part of the dust and dirt in the room and protect the heater from contamination.

Include **drain pans** that allow the device to operate both above and below the dew point.

Quiet and extremely economical EC fans increase the convection efficiency more than 4 times, almost without any sound.

Due to **extremely low inertia**, can quickly increase and precisely maintain the set room temperature, **providing the room with exactly as much heat as you require just when it is required.**

Create an effective warm air curtain for large windows, without allowing cold to penetrate the premises. The **heat is perfectly distributed** throughout the room.

Operates very well with **low-temperature heat sources**, such as heat pumps or condensing boilers.

Fully integrated into the floor, and therefore **do not impede free passage**.

Perfect for any interior, as the only visible element is the grill, the material and colour of which matches floor covering.

May be walked on and can easily **withstand the weight of a number of adults**.

Supplied with a **stainless steel casings** and **copper-aluminium heat exchangers**, to ensure they remain extremely reliable over the long-term.

10-year warranty for the casings and heat exchangers

We are confident in the longevity of our housings and heat exchangers; therefore, we provide them with a 10-year guarantee.

Tested according to EN16430

The outputs of all products manufactured by Konveka have been tested by independent accredited laboratories according to the latest standards.
With us, 1 kW means 1 kW.

Fans with EC technology

All Konveka forced convection devices are equipped with fans that employ **EC technology**. This is far superior to AC technology, as the fans:

1. Are **7 times more economical**.
2. Brushless motors are more durable and are **maintenance-free**.
3. Speed is **adjustable stepless**, using only as much power as required.
4. Starting currents do not exceed the operating currents.
5. Minimum rotation speed is 10% (out of max.)

Work perfectly with low-temperature energy carriers

Due to their high efficiency, FCH are very **suitable for** operating with low-temperature energy carriers, such as **heat pumps** and **condensing boilers**.

Sound insulation

All the supporting parts have sound-insulating elements, to prevent the spread of sound to the premises below.

Especially quiet operation

We have achieved exceptionally low noise levels using **extremely quiet EC fans** and by the **optimisation** of their **rotational speed** and **design** of the devices.

All body parts are made of stainless steel

Stainless steel provides **100% corrosion protection** for an indefinite time. It is also **54% stronger** and **45% harder** than carbon steel, so it can withstand loads during transportation, installation, and operation.

Reinforced casings

As a standard, the FCH convector casings are equipped with:

1. **Stiffening elements** to maintain the pressure of the concrete – from 2 to 3 pcs, depending on the length of the casing.
2. M10 **support screws** to withstand the vertical load – from 4 to 12 pcs.
3. Mounting **brackets** for attaching the casing to the floor – 4 pcs.

These structural elements, together with the strong casing material, ensure their stable shape during installation, transportation and operation.

Maximum operating pressure – 25 bar

All the devices are **factory-tested** for leaks at a pressure of **30 bar.** The maximum maintained pressure (strength limit) is **110 bar.** Konveka devices easily withstand hydraulic tests, hydraulic shocks and can be installed in extremely tall buildings.

Safe operating voltage of fans

The operating voltage of all fans is 24V DC. This voltage is safe for humans.

STANDARD SET

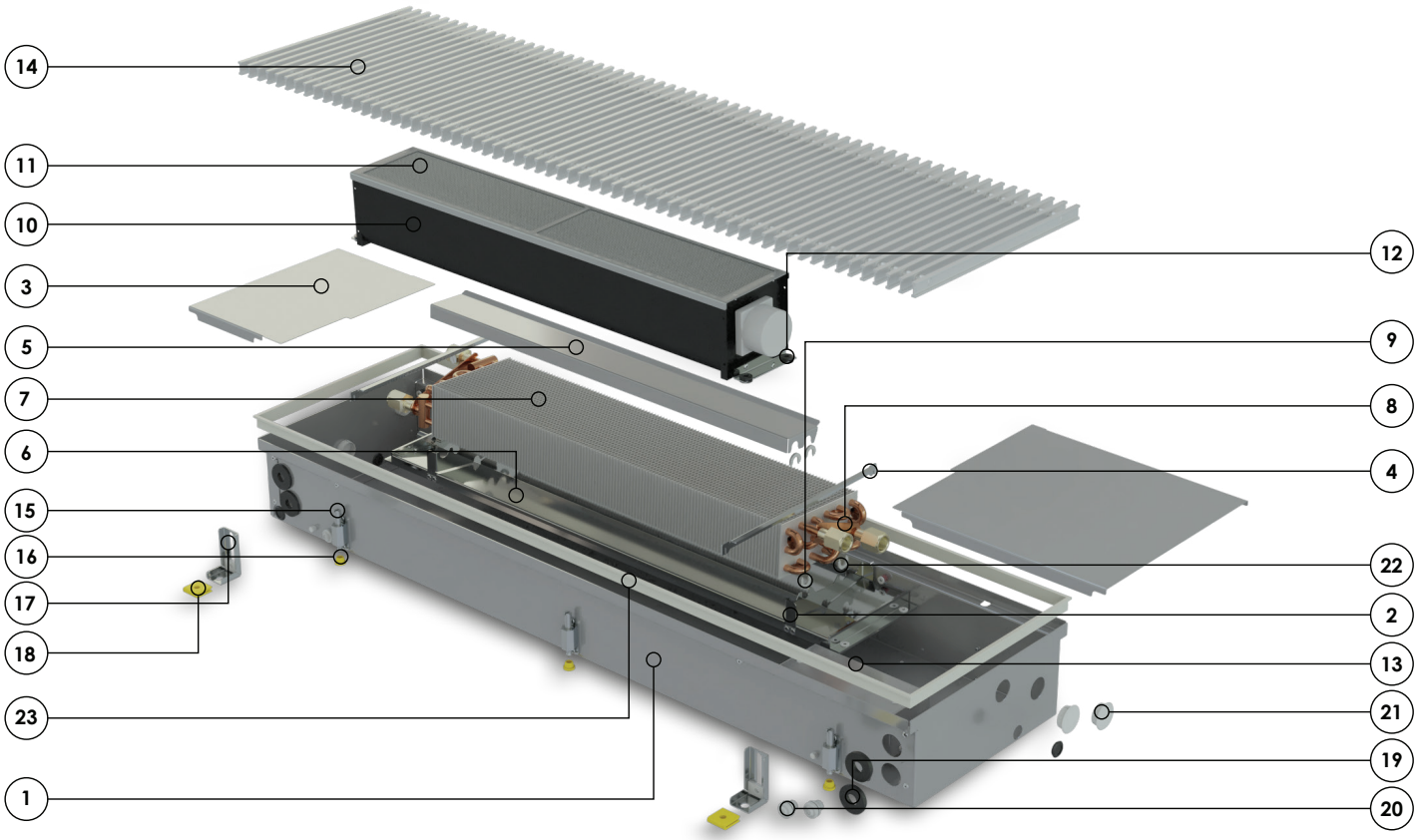

1. Stainless steel casing
2. Brackets for heat exchanger
3. Hydraulic connections cover
4. Casing's stiffening elements
5. Air guiding element
6. Drain pan
7. Copper - aluminium heat exchanger
8. Air vent
9. Heat exchanger fixing - protecting elements
10. Fan with EC motor
11. Air filter
12. Vibration dampers for fan
13. Control box (optional)
14. Protective - decorative grille (optional)
15. Height adjustment and vertical load supporting bolts
16. Noise isolating elements for adjusting screws
17. Casing fixing to the floor brackets
18. Noise isolation elements for floor brackets
19. Pipe sealing and protection elements
20. Cable sealing and protection elements
21. Plugs for unused casing holes
22. Anodized aluminium frame; colour matches the colour of grille

All fasteners required for installation

Installation manual

5-layer, 2 parts cardboard box, additionally used for device protecting during installation and construction works

FCH

OVERVIEW

5 models

Lengths	120, 170, 200, 250, 300 cm
Width	32 cm
Height	13 cm

5 models

Lengths	120, 170, 200, 250, 300 cm
Width	32 cm
Height	13 cm

FCH2

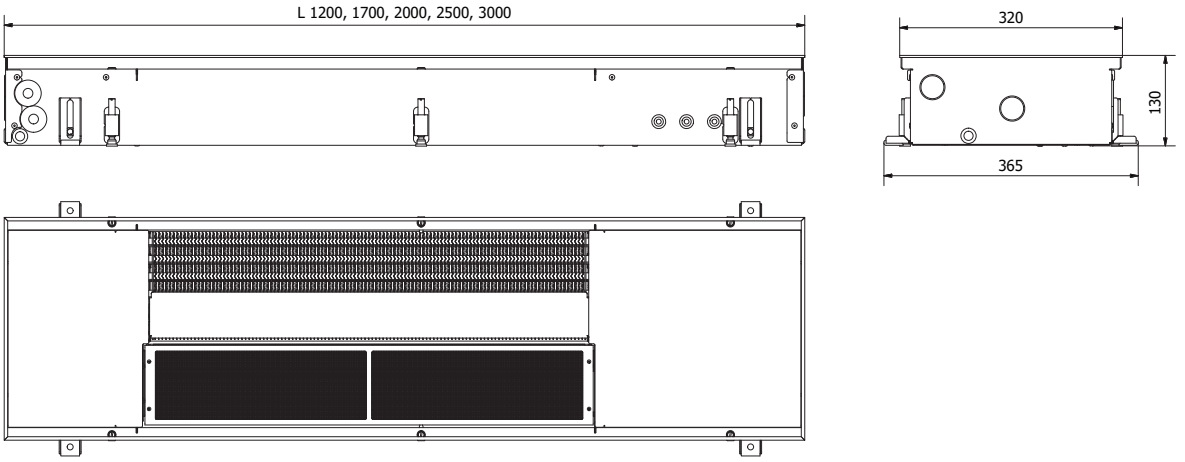

TECHNICAL DATA

Length	1200-3000 mm	Thread of hydr. connections	G 1/2“
Width	320 mm	Thread type of hydr. connections	inner
Height = installation height	130 mm	Position of the hydr. connections	1 side
Type of fan motors	EC	Operating pressure	25 bar
Fan operating voltage	24V DC	Operating temperature	2 - 120°C
Fan speed control voltage	0 - 10V		

FCH2

EN16430 certified outputs

Fan speed	Heat outputs, W			Sensible cooling capacity, W			Sound levels		Air flow m³/h
	75/65/20°C Δt = 50°C	55/45/20°C Δt = 30°C	35/30/20°C Δt = 12,5°C	7/12/27°C Δt = 17,5°C	**7/12/25°C Δt = 15,5°C**	14/17/25°C Δt = 9,5°C	Sound pressure level, dB(A)	Sound power level, dB(A)	
FCH2 115									
100%	**3 326**	1 975	809	974	**870**	552	41	49	0 - 383
80%	**2 962**	1 759	720	815	**728**	462	36	45	
60%	**2 487**	1 477	605	652	**582**	369	28	37	
40%	**1 912**	1 135	465	475	**424**	269	23	32	
20%	**1 132**	672	275	277	**248**	157	20	29	
FCH2 160									
100%	**5 781**	3 433	1 405	1 755	**1 568**	994	42	51	0 - 520
80%	**5 264**	3 126	1 280	1 473	**1 316**	835	41	50	
60%	**4 427**	2 629	1 076	1 174	**1 049**	665	34	44	
40%	**3 399**	2 019	826	856	**765**	485	29	38	
20%	**2 014**	1 196	490	500	**446**	283	25	35	
FCH2 180									
100%	**6 653**	3 951	1 617	1 949	**1 741**	1 104	44	53	0 - 766
80%	**5 924**	3 518	1 440	1 630	**1 456**	924	39	48	
60%	**4 975**	2 954	1 210	1 303	**1 164**	738	31	41	
40%	**3 824**	2 271	930	949	**848**	538	24	34	
20%	**2 264**	1 345	551	554	**495**	314	22	32	
FCH2 230									
100%	**9 107**	5 408	2 214	2 730	**2 438**	1 546	43	54	0 - 903
80%	**8 226**	4 885	2 000	2 289	**2 044**	1 296	40	50	
60%	**6 914**	4 106	1 681	1 826	**1 631**	1 034	33	43	
40%	**5 311**	3 154	1 291	1 331	**1 188**	754	26	37	
20%	**3 146**	1 868	765	777	**694**	440	24	33	

Fan speed	Heat outputs, W			Sensible cooling capacity, W			Sound levels		Air flow m³/h
	75/65/20°C Δt = 50°C	55/45/20°C Δt = 30°C	35/30/20°C Δt = 12,5°C	7/12/27°C Δt = 17,5°C	**7/12/25°C Δt = 15,5°C**	14/17/25°C Δt = 9,5°C	Sound pressure level, dB(A)	Sound power level, dB(A)	
FCH2 275									
100%	**11 561**	6 866	2 811	3 511	**3 136**	1 989	43	54	0 - 1 040
80%	**10 529**	6 253	2 560	2 947	**2 632**	1 669	42	53	
60%	**8 853**	5 258	2 153	2 348	**2 097**	1 330	33	44	
40%	**6 798**	4 037	1 653	1 712	**1 529**	970	27	38	
20%	**4 027**	2 392	979	999	**893**	566	24	35	

Heat outputs at specific temperatures are available at www.konveka.lt

Model	Length, mm	No. of fans, pc	Max el. power, A	Max el. power, W	Length of heat ex-changer, mm	Weight, kg	Water volume, l
FCH2 115	1 200	1	0,63	15	675	21,2	0,77
FCH2 160	1 700	1	0,75	18	1 189	28,9	1,35
FCH2 180	2 000	2	1,25	30	1 431	33,9	1,62
FCH2 230	2 500	2	1,38	33	1 945	42,2	2,21
FCH2 275	3 000	2	1,50	36	2 458	51,5	2,79

FCH2

EXAMPLE OF CONNECTIONS

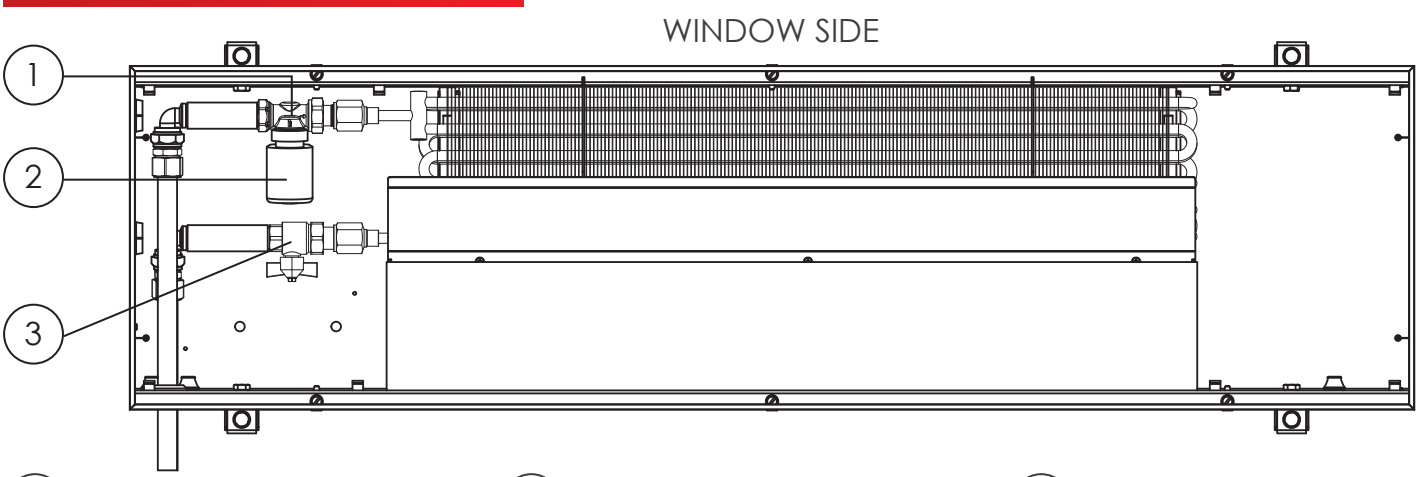

1 Thermostatic valve, straight 2 Thermostatic valve actuator 3 Straight lockshield valve

INSTALLATION FEATURES

- Side with heat exchanger is always mounted closer to the window (wall)
- Energy carrier supply pipes has to be connected to heat exchangers connectors which are further from the fans
- Energy carrier outlet pipes has to be connected to heat exchangers connectors which are closer to the fans
- Height of the device can be adjusted at any time of exploitation (when installed in raised floor)

ORDER CODES

Type	Length, cm	Width, cm	Height, cm	Example
FCH2	250	32	13	FCH2 250

FCH4

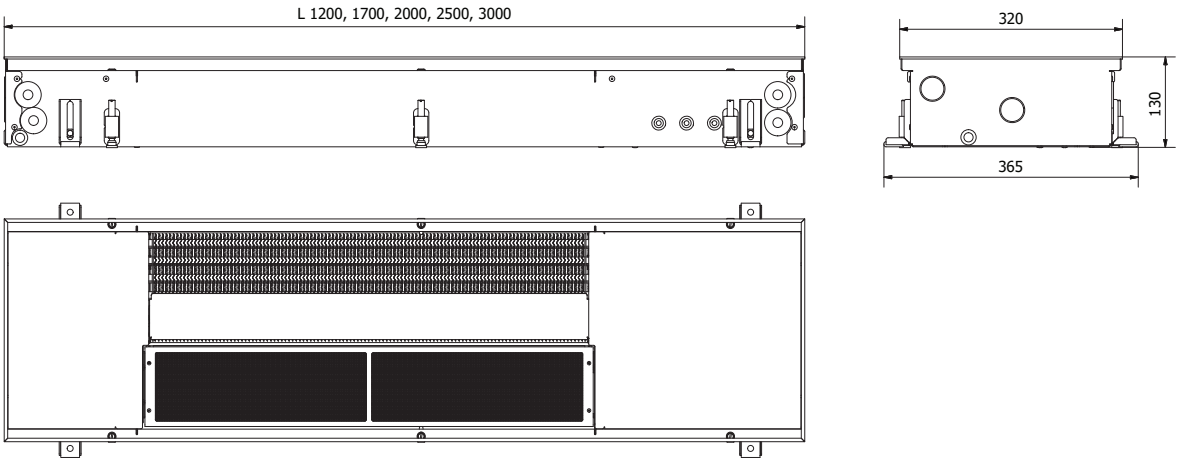

TECHNICAL DATA

Length	1200-3000 mm	Thread of hydr. connections	G 1/2“
Width	320 mm	Thread type of hydr. connections	inner
Height = installation height	130 mm	Position of the hydr. connections	1 side
Type of fan motors	EC	Operating pressure	25 bar
Fan operating voltage	24V DC	Operating temperature	2 - 120°C
Fan speed control voltage	0 - 10V		

EN16430 certified outputs

Fan speed	Heat outputs, W			Sensible cooling capacity, W			Sound levels		Air flow m³/h
	75/65/20°C Δt = 50°C	55/45/20°C Δt = 30°C	35/30/20°C Δt = 12,5°C	7/12/27°C Δt = 17,5°C	**7/12/25°C Δt = 15,5°C**	14/17/25°C Δt = 9,5°C	Sound pressure level, dB(A)	Sound power level, dB(A)	
FCH4 115									
100%	**2 013**	1 196	490	960	**857**	544	41	49	0 - 383
80%	**1 859**	1 104	452	808	**722**	458	36	45	
60%	**1 661**	986	404	647	**578**	367	28	37	
40%	**1 380**	820	336	473	**423**	268	23	32	
20%	**901**	535	219	277	**247**	157	20	29	
FCH4 160									
100%	**3 624**	2 152	881	1 728	**1 542**	979	42	51	0 - 520
80%	**3 347**	1 988	814	1 454	**1 299**	824	41	50	
60%	**2 989**	1 775	727	1 165	**1 040**	660	34	44	
40%	**2 485**	1 476	604	852	**761**	482	29	38	
20%	**1 623**	964	395	499	**445**	283	25	35	
FCH4 180									
100%	**4 026**	2 392	980	1 920	**1 714**	1 088	44	53	0 - 766
80%	**3 718**	2 208	904	1 616	**1 444**	916	39	48	
60%	**3 322**	1 972	808	1 294	**1 156**	734	31	41	
40%	**2 760**	1 640	672	946	**846**	536	24	34	
20%	**1 802**	1 070	438	554	**494**	314	22	32	
FCH4 230									
100%	**5 637**	3 348	1 371	2 688	**2 399**	1 523	43	54	0 - 903
80%	**5 206**	3 092	1 266	2 262	**2 021**	1 282	40	50	
60%	**4 650**	2 761	1 131	1 812	**1 618**	1 027	33	43	
40%	**3 865**	2 296	940	1 325	**1 184**	750	26	37	
20%	**2 524**	1 499	614	776	**692**	440	24	33	

Fan speed	Heat outputs, W			Sensible cooling capacity, W			Sound levels		Air flow m³/h
	75/65/20°C Δt = 50°C	55/45/20°C Δt = 30°C	35/30/20°C Δt = 12,5°C	7/12/27°C Δt = 17,5°C	**7/12/25°C Δt = 15,5°C**	14/17/25°C Δt = 9,5°C	Sound pressure level, dB(A)	Sound power level, dB(A)	
FCH4 275									
100%	**7 248**	4 304	1 762	3 456	**3 084**	1 958	43	54	0 - 1 040
80%	**6 694**	3 976	1 628	2 908	**2 598**	1 648	42	53	
60%	**5 978**	3 550	1 454	2 330	**2 080**	1 320	33	44	
40%	**4 970**	2 952	1 208	1 704	**1 522**	964	27	38	
20%	**3 246**	1 928	790	998	**890**	566	24	35	

Heat outputs at specific temperatures are available at www.konveka.lt

Model	Length, mm	No. of fans, pc	Max el. power, A	Max el. power, W	Length of heat ex-changer, mm	Weight, kg	Water volume, l	
							Heating	Cooling
FCH4 115	1 200	1	0,63	15	675	21,2	0,17	0,60
FCH4 160	1 700	1	0,75	18	1 189	28,9	0,30	1,05
FCH4 180	2 000	2	1,25	30	1 431	33,9	0,36	1,26
FCH4 230	2 500	2	1,38	33	1 945	42,2	0,49	1,72
FCH4 275	3 000	2	1,50	36	2 458	51,5	0,62	2,17

FCH4

EXAMPLE OF CONNECTIONS

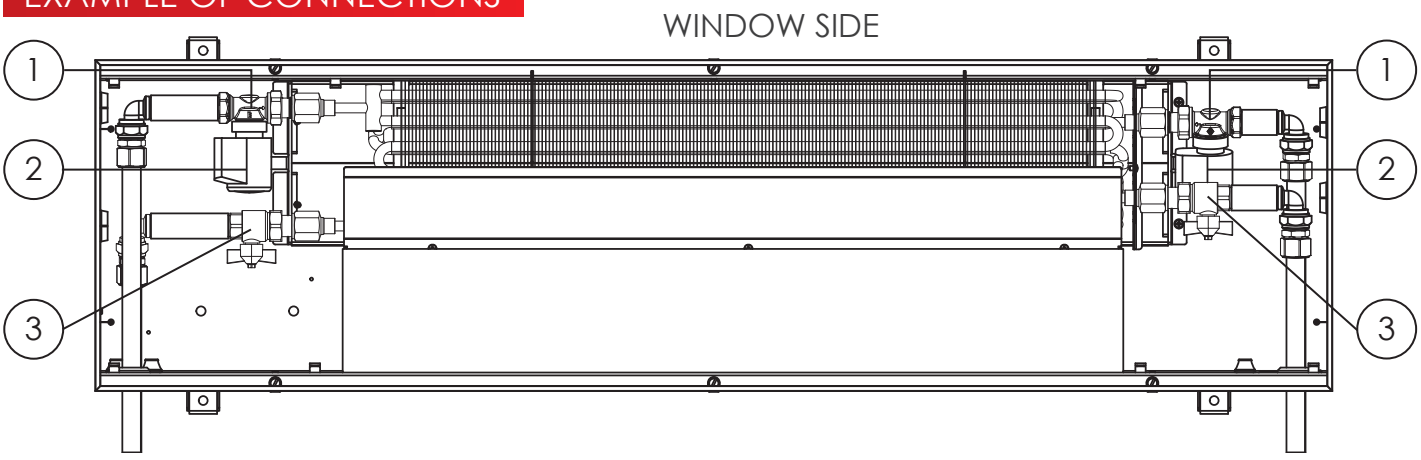

(1) Thermostatic valve, straight (2) Thermostatic valve actuator (3) Straight lockshield valve

INSTALLATION FEATURES

- The side with the heat exchanger is always mounted closer to the window (wall)
- Possibility to connect pipes through the side or end of the convector
- The 4-pipe heat exchanger has two independent circuits. They are connected to the heating and cooling systems on both sides of the device as follows:

  - To a cooling system – on a side of the control box;

  - To a heating system – on a side of condensate water outlet.
- Energy carrier supply have to be connected to heat exchanger connection which is further from fans
- Outgoing pipes of both circuits have to be connected to the heat exchanger's connections which is closer to fans
- All fasteners required for mounting are included in the standard kit
- The possibility of adjusting the height of the device after mounting (when mounting into raised floor)

ORDER CODES

Type	Length, cm	Width, cm	Height, cm	Example
FCH4	250	32	13	FCH4 250

ACCESSORIES

THERMOSTATIC VALVE **TVS15**

Controls flow of energy carrier. Controled by thermal actuator TA24

- Controls flow with thermoelectric actuator
- Provides possibility to close flow and disconnect heat exchanger from heating system without draining
- DN15 Kvs = 2,00

LOCKSHIELD VALVE (STRAIGHT) **LS15**

Opens, closes or limits flow of energy carrier

- For energy carrier opening, closing and presetting of maximal flow
- Provides possibility to close flow and disconnect heat exchanger from heating system without draining
- DN15 Kvs = 1,74
  DN20 Kvs = 1,93

LOCKSHIELD VALVE (ANGLE) **LA15**

Opens, closes or limits flow of energy carrier

- For energy carrier opening, closing and presetting of maximal flow
- Provides possibility to close flow and disconnect heat exchanger from heating system without draining
- DN15 Kvs = 1,74
  DN20 Kvs = 1,93

THERMOSTATIC VALVE ACTUATOR **TA24**

Opens / closes thermostatic valve. Controled by room thermostat RTB24

- Opening/closing of thermostatic valves (ON/OFF)
- Thermoelectric
- Opened/Closed indicator
- Voltage 24V DC

ROOM THERMOSTAT **RTB24**

Controls thermal actuator TA24 and fans according to preset room temperature

- For maintaining the set room temperature
- Day/night and weekly temperature programmes
- Accuracy of temperature control ± 0.5°C
- Power supply of 24V DC
- Stepless fan rotating speed control, 0–10 V
- Valve actuator control (ON/OFF)
- Backlit LED display

ELECTRIC CONTROL BOX **CB20**

For power supply of fans, actuators TA24 and room thermostat RTB24

- Can be installed inside convector's casing
- Ensures easy and fast connection between convector and room thermostat
- 24V DC power supply included
- El. connectors for fast connection of the cables included

ORDER CODES

Accessory	Order code
Thermostatic valve	TVS15
Thermostatic valve actuator	TA24
Lockshield valve (angle)	LA15
Lockshield valve (straight)	LS15
Room thermostat	RTB24
Electric control box	CB20

CONNECTING ONE **FCH** TO ROOM THERMOSTAT

ROOM THERMOSTAT **RTB24**

TRENCH HEATER **FCH**

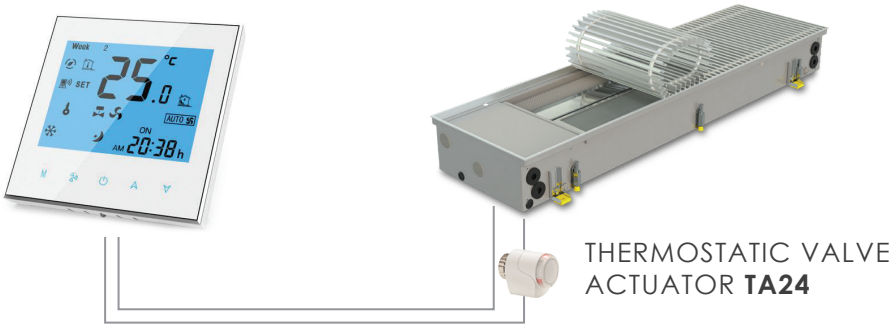

CONNECTING MULTIPLE **FCH** TO ROOM THERMOSTAT

ROOM THERMOSTAT **RTB24**

TRENCH HEATERS **FCH** (UP TO 30 PCS)

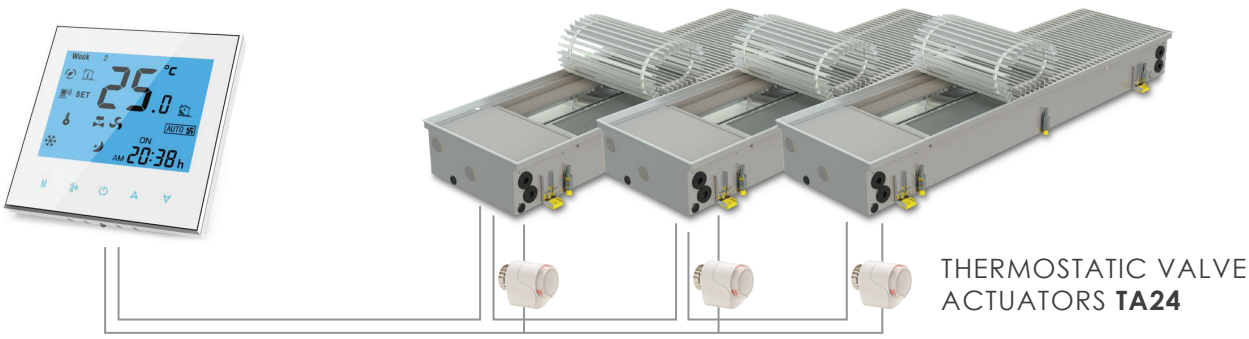

WIRING DIAGRAM

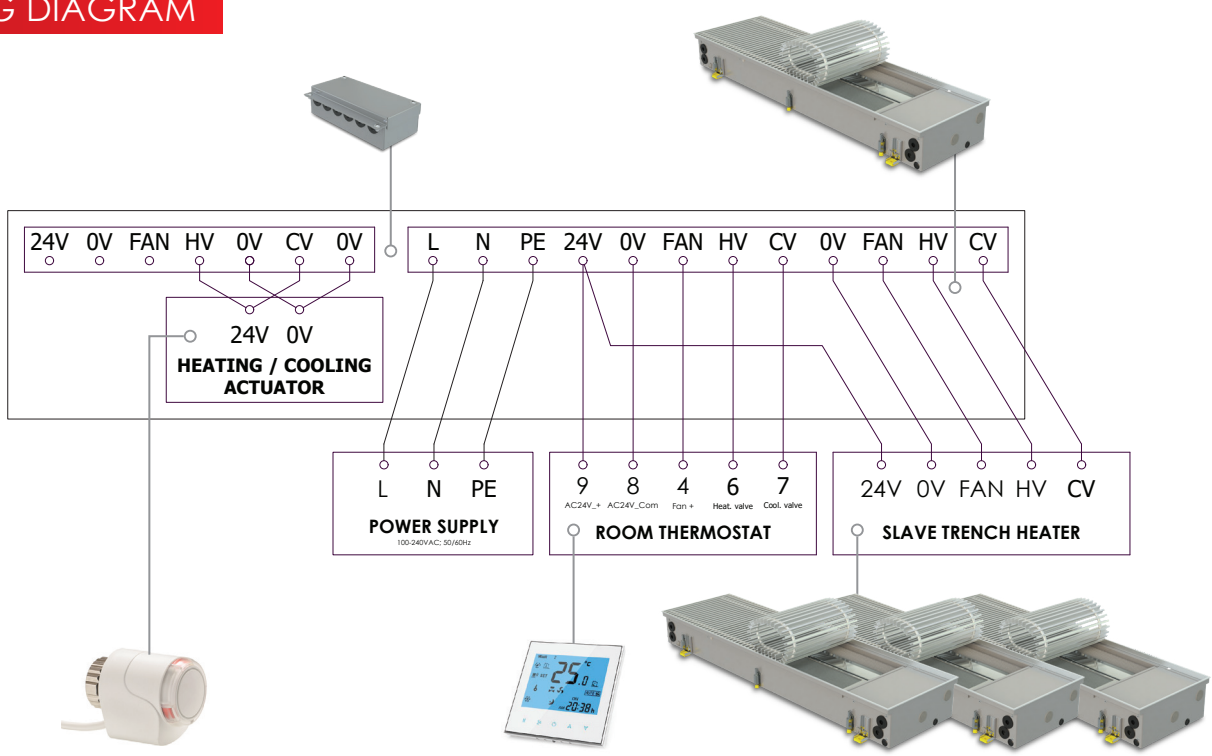

- Trench heaters installed in the same room are controlled based on the Master - Slave principle
- Speed of fans are controlled 0-10 V by room thermostat. Voltage – 24VDC
- Valve actuators are controlled ON/OFF by room thermostat. Voltage – 24VDC
- Up to 30 trench heaters can be controlled with one room thermostat RTB24

GRILLES

ALUMINIUM ROLL-UP GRILLES

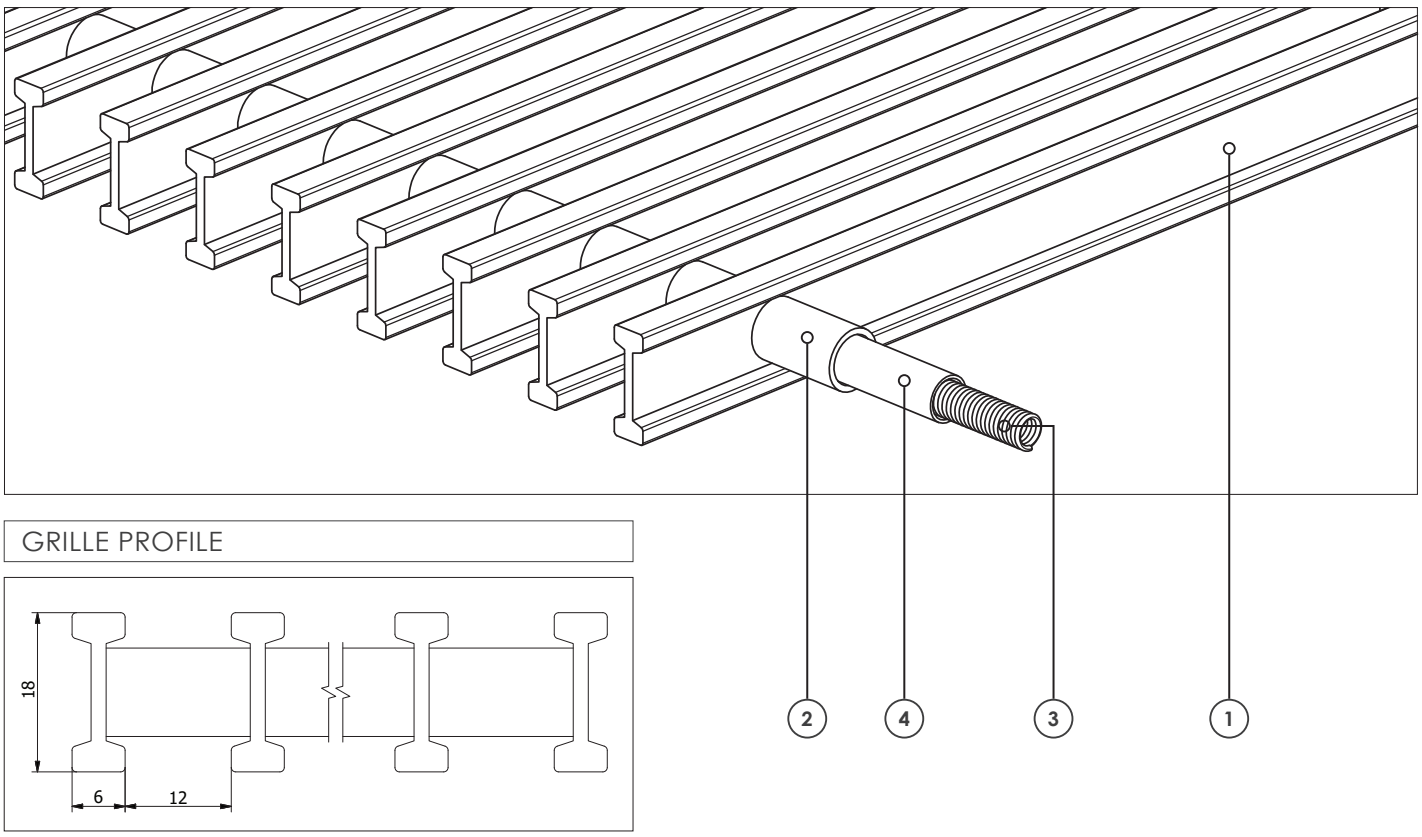

GRILLE PROFILE

1 Aluminium profile
- made of anodized aluminium
- reinforced reversable double T profile

2 Spacers
- made of anodized aluminium
- does not shrink or crack when exposed on UV or heat
- the colour is exactly the same as colour of profiles

3 Spring

4 Flexible protective pipe

SILVER (ALS)

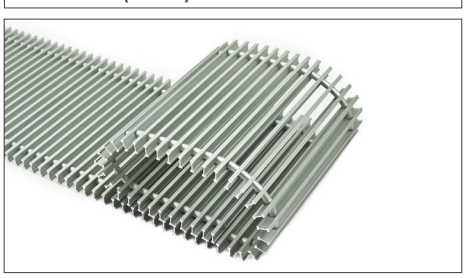

BROWN (AL 10)

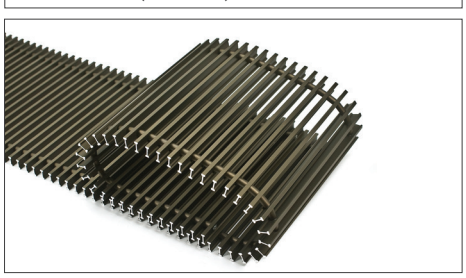

BLACK (AL 50)

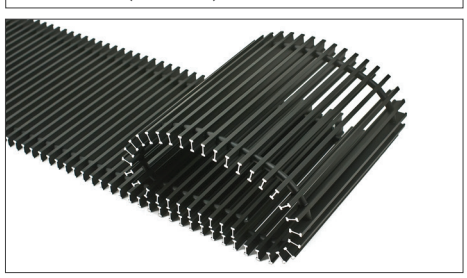

ALUMINIUM LINEAR GRILLES

SILVER (ALS)

BROWN (AL 10)

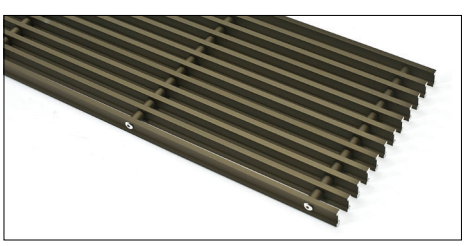

BLACK (AL 50)

WOODEN ROLL-UP GRILLES

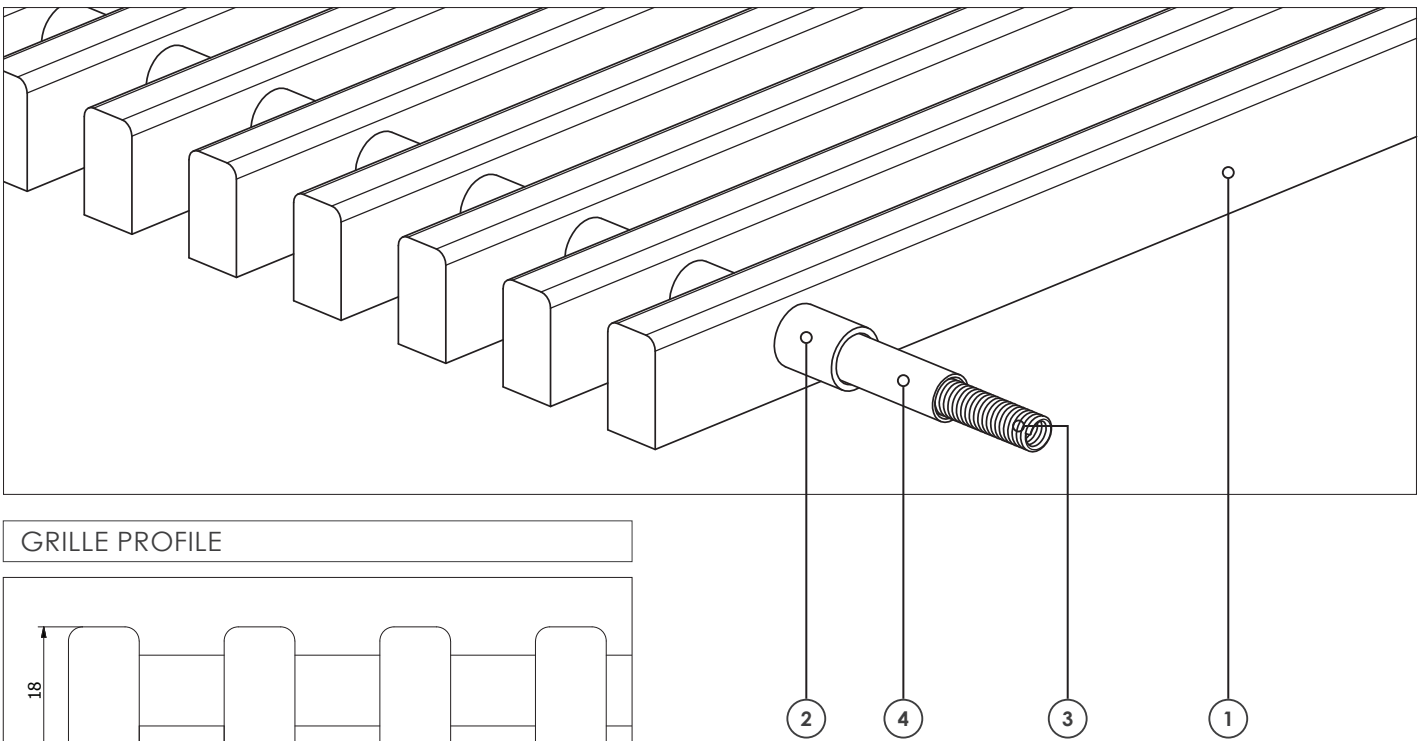

GRILLE PROFILE

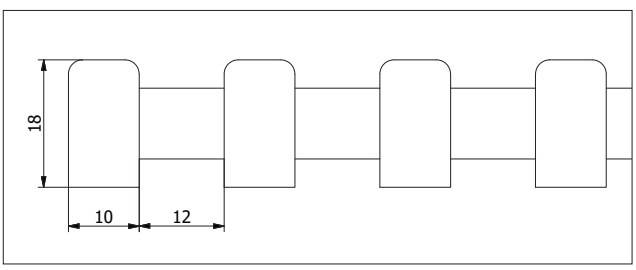

1 Wooden profile
- made of solid wood

2 Spacers
- made of anodized aluminium
- does not shrink or crack when exposed on UV or heat

3 Spring

4 Flexible protective pipe

OAK

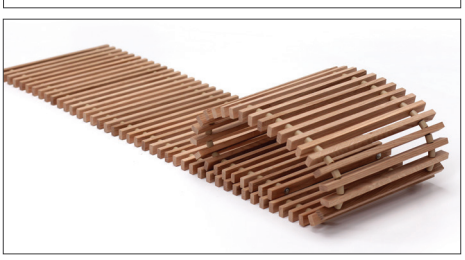

ASH

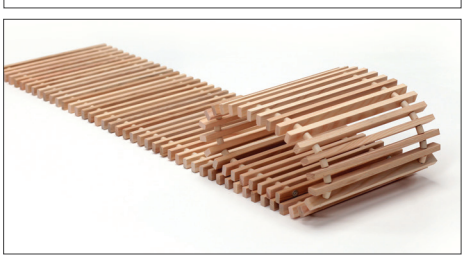

BEECH

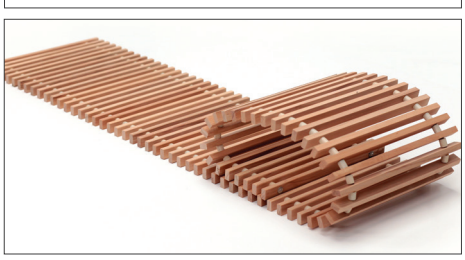

ORDER CODE FOR GRILLES

Type	Length, cm	Width, cm	Material	Example
GR	200	32	ALS	GR 200-32 ALS

ABOUT KONVEKA

Konveka is a **full production cycle convector manufacturing company** engaged in this activity **since 2005**. The range of products we develop and manufacture is wide: from simple natural convection convectors to complex devices with fans for heating, cooling and ventilation.

Konveka is a manufacturer of high-quality and reliable convectors:

- We provide a **5 - 10 year warranty for all our products** (except their electrical part) without any additional warranty extension fees.
- **The capacities of all our products are determined by independent accredited laboratories** according to current standards. With us, 1kW means 1kW.
- We **do not use cheap, unapproved solutions or use unreliable materials** when designing and manufacturing our devices.

Although we operate in a highly competitive international market, **we are at the forefront where quality, durability and reliability are valued**.

We are well known in **Eastern and Western Europe, Scandinavia, North America and Central Asia**. Konveka products can be seen in many prestigious buildings around the world: administrative buildings, shopping malls, airports, restaurants, theaters, universities, hotels, apartment buildings and individual homes. Visit our website www.konveka.com for more information.

Konveka consistently wins **national awards** (see below) for **reliability, consistency and business growth**.

Our slogan - **"More than you expected"** reflects the quality of our products and technical solutions, which often exceed customer expectations. We value our customers and are happy to be a part of their successful business.

KONVEKA

NOTES

Konveka, UAB
Vokieciu 185, LT-45251 Kaunas
Tel. +370 600 05968, +370 677 06303
Email: donatas@konveka.lt, sales@konveka.lt

www.konveka.com